3 601 JB9 5B0
Stand } ~~13-09-10~~
Issue } 13-11-07

Fig./Abb. 1

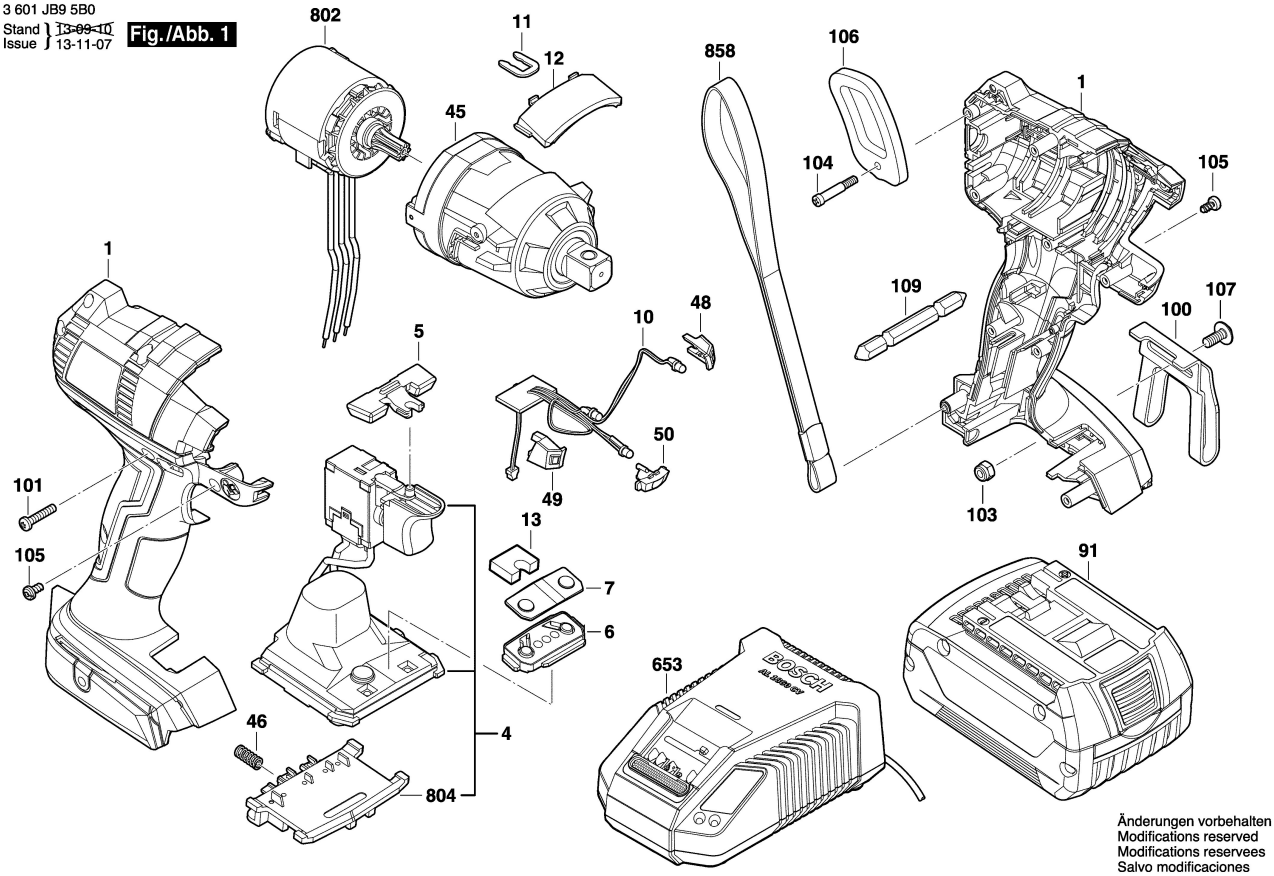

Änderungen vorbehalten
Modifications reserved
Modifications reservees
Salvo modificaciones

3 601 JB9 5B0
Stand } 13-11-07
Issue

Fig./Abb. 2

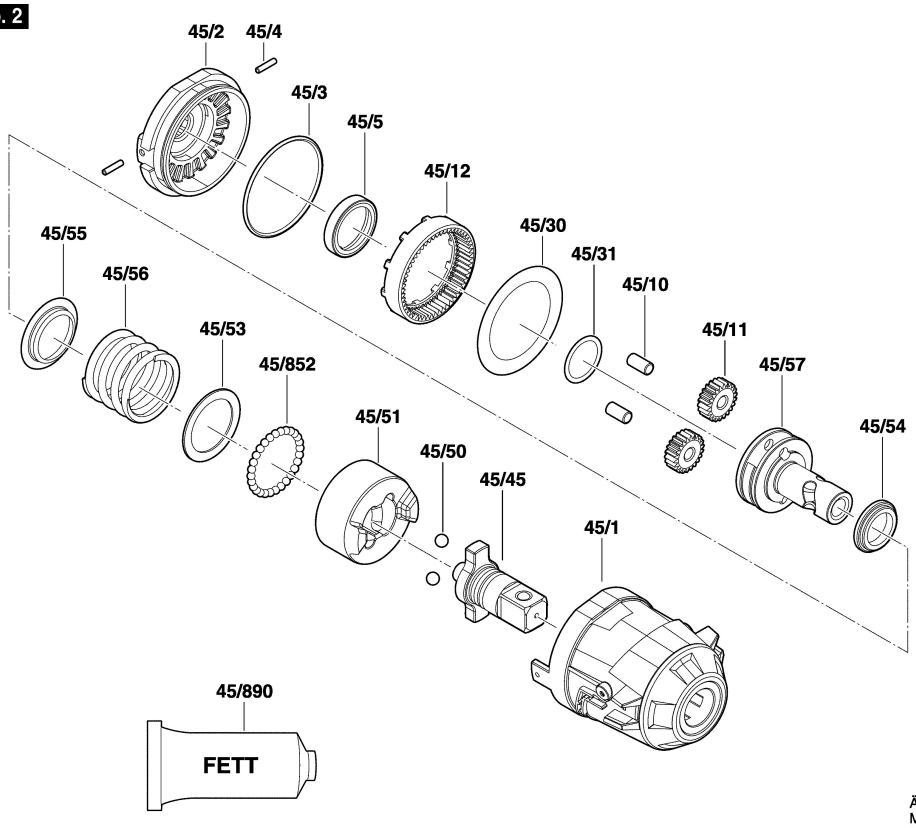

Anzugsmomente
Torque values
Couple de serrage
Pares de apriete

Pos 101	=	0,8	-	1,2	Nm
104	=	0,5	-	1,0	Nm
105	=	0,4	-	0,6	Nm
107	=	1,7	-	2,0	Nm

Änderungen vorbehalten
Modifications reserved
Modifications reservees
Salvo modificaciones