Type: KBM 80 auto (60Hz, 120V)
Part no.: 72703209360

7 270 32 - KBM 80 auto

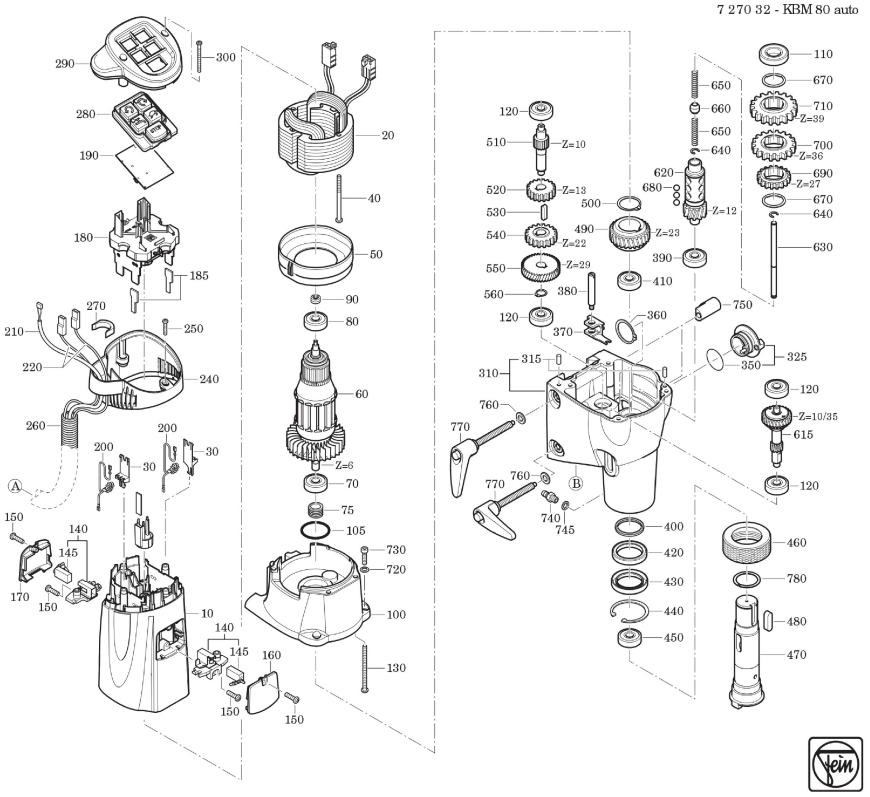

Type: KBM 80 auto (60Hz, 120V)
Part no.: 72703209360

7 270 32 - KBM 80 auto

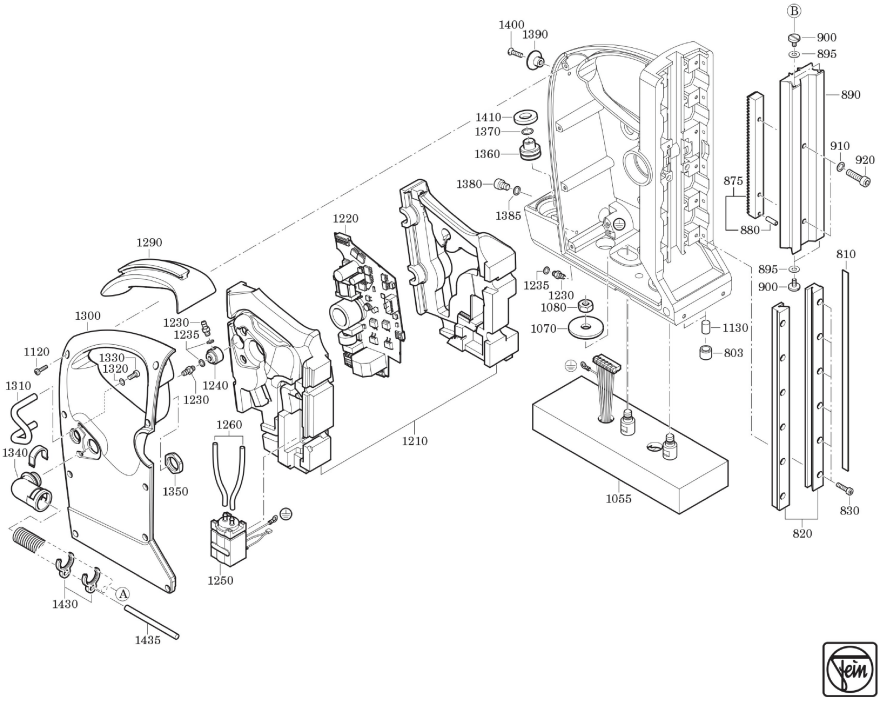

Type: KBM 80 auto (60Hz, 120V)
Part no.: 72703209360

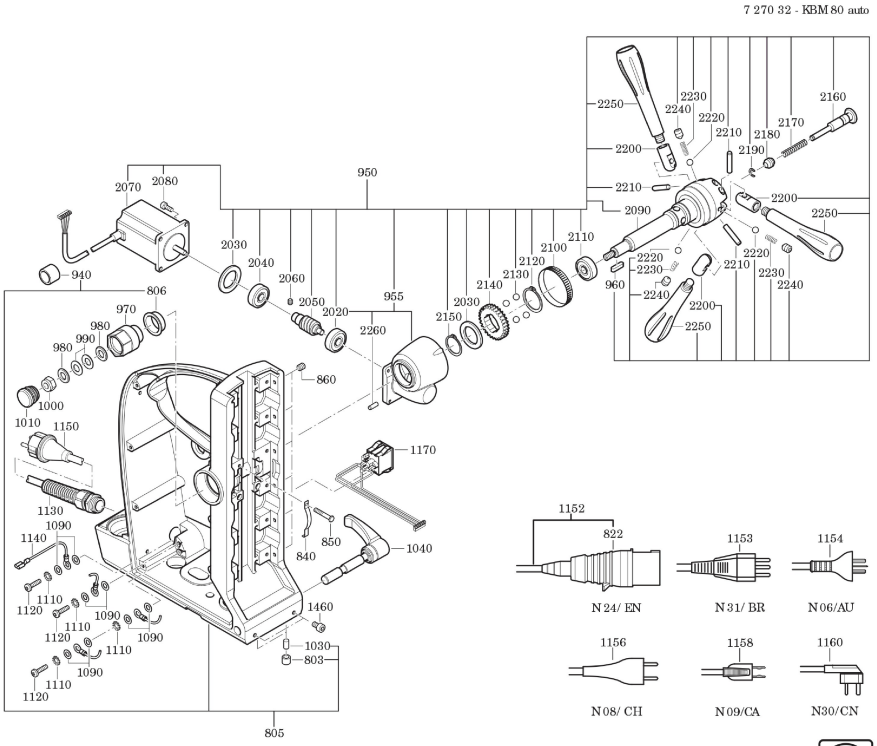
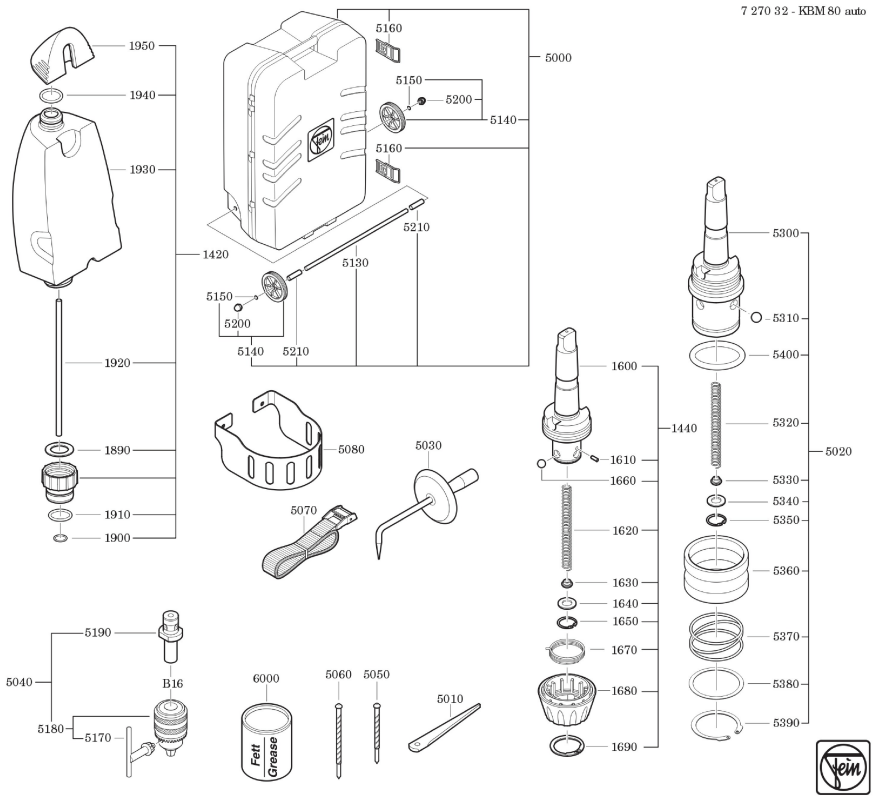
Type: KBM 80 auto (60Hz, 120V)
Part no.: 72703209360