Type: KBB 30 Rev. X
Part no.: 72721124110

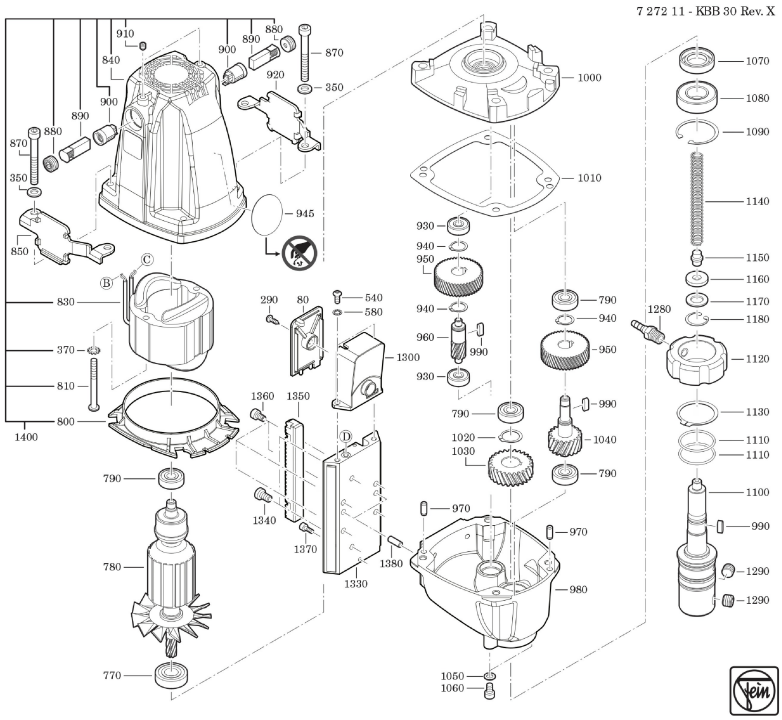

Type: KBB 30 Rev. X
Part no.: 72721124110

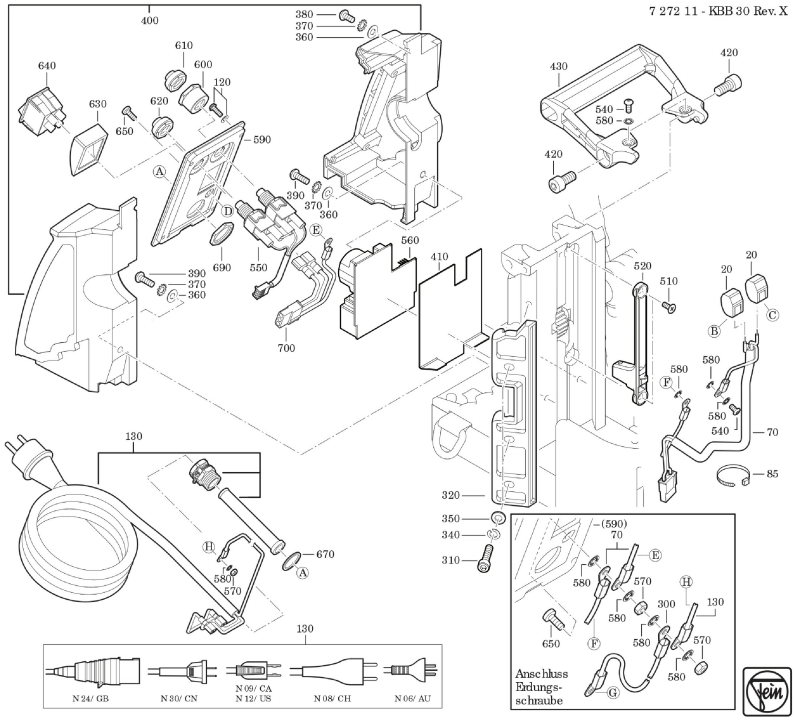
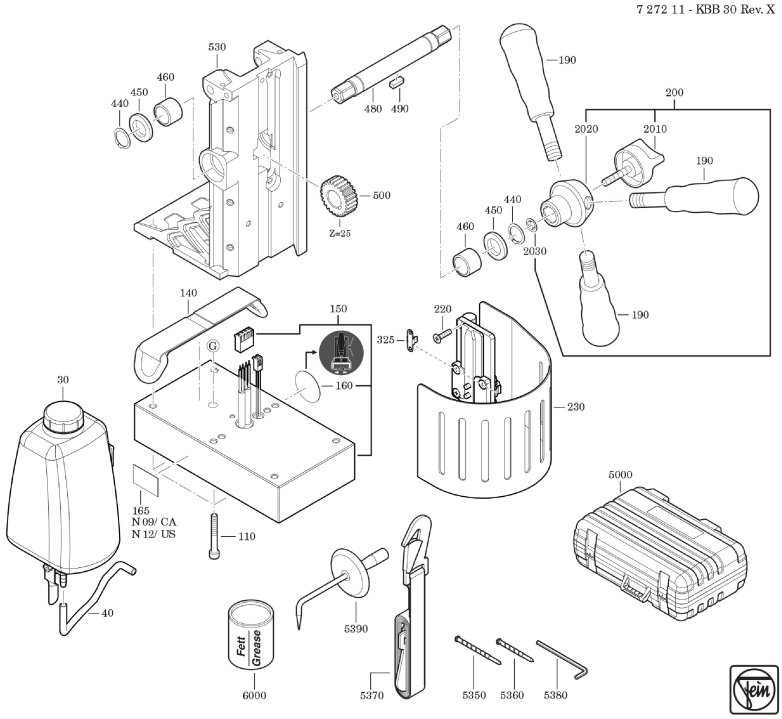
Type: KBB 30 Rev. X
Part no.: 72721124110