**Type:** GRIT GI 150 2H
**Part no.:** 79020500233

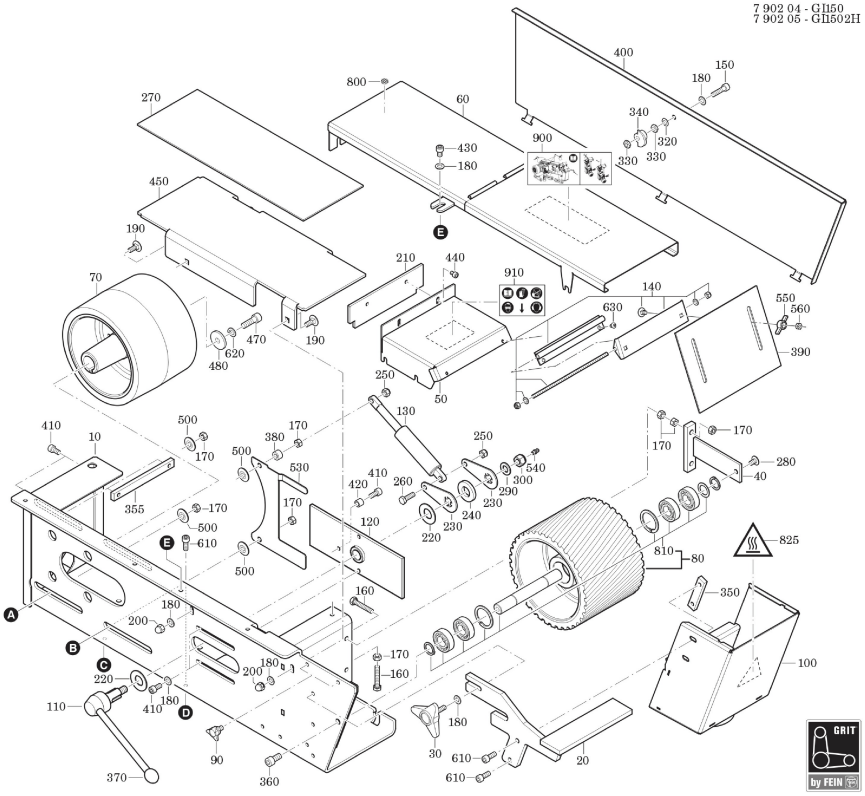

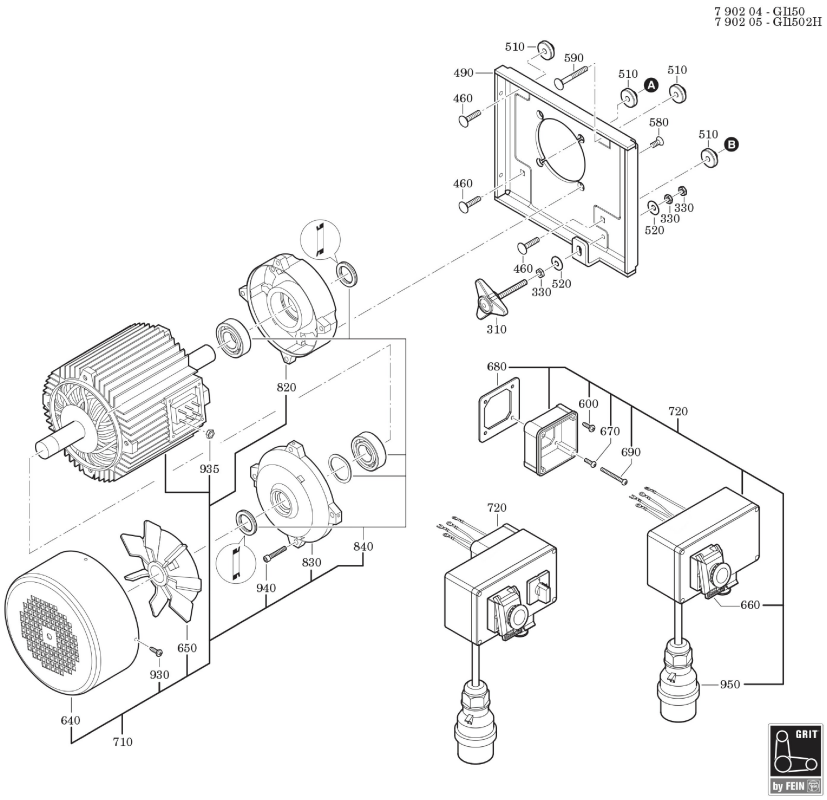
**Type:** GRIT GI 150 2H
**Part no.:** 79020500233