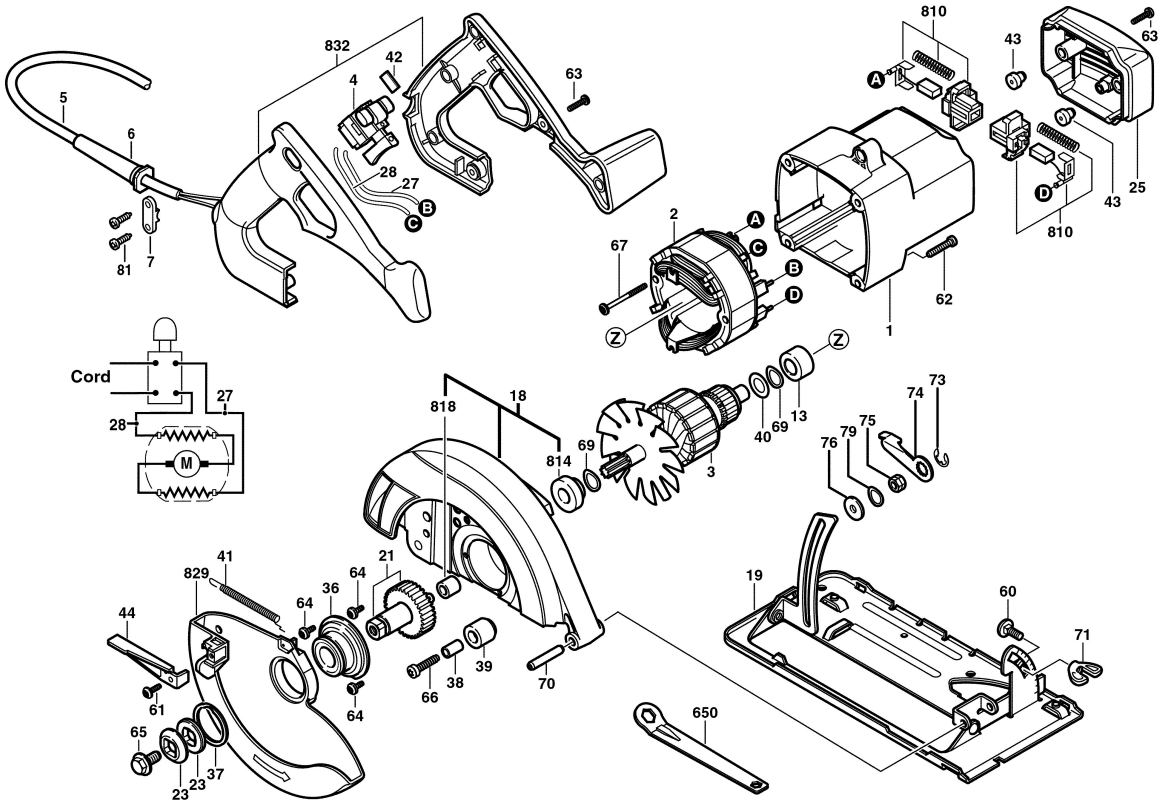F012 515 080
Issue / Stand 99-12-27 **Fig./Abb. 1**