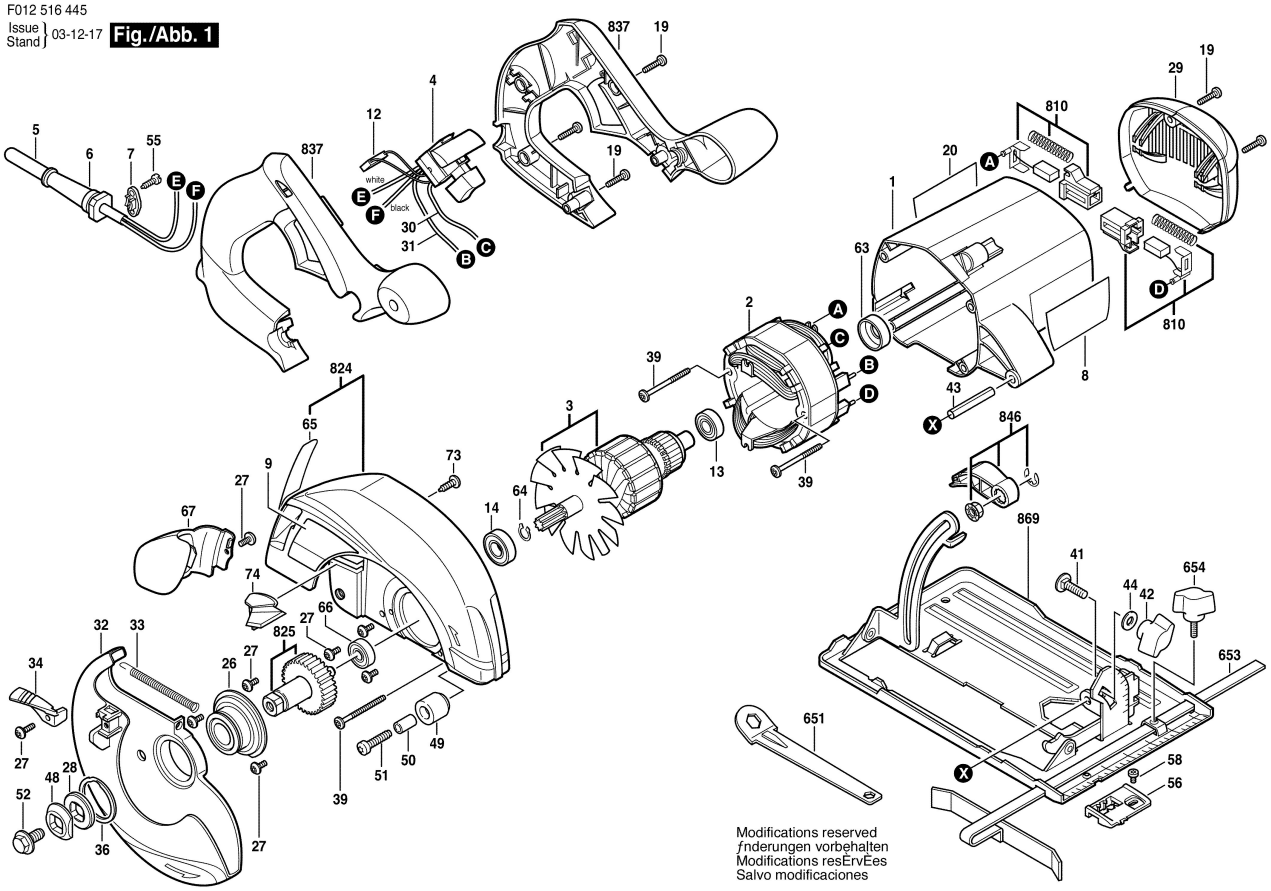F012 516 445
Issue Stand } 03-12-17 **Fig./Abb. 1**