F012 525 041
Issue
Stand } 99-12-27
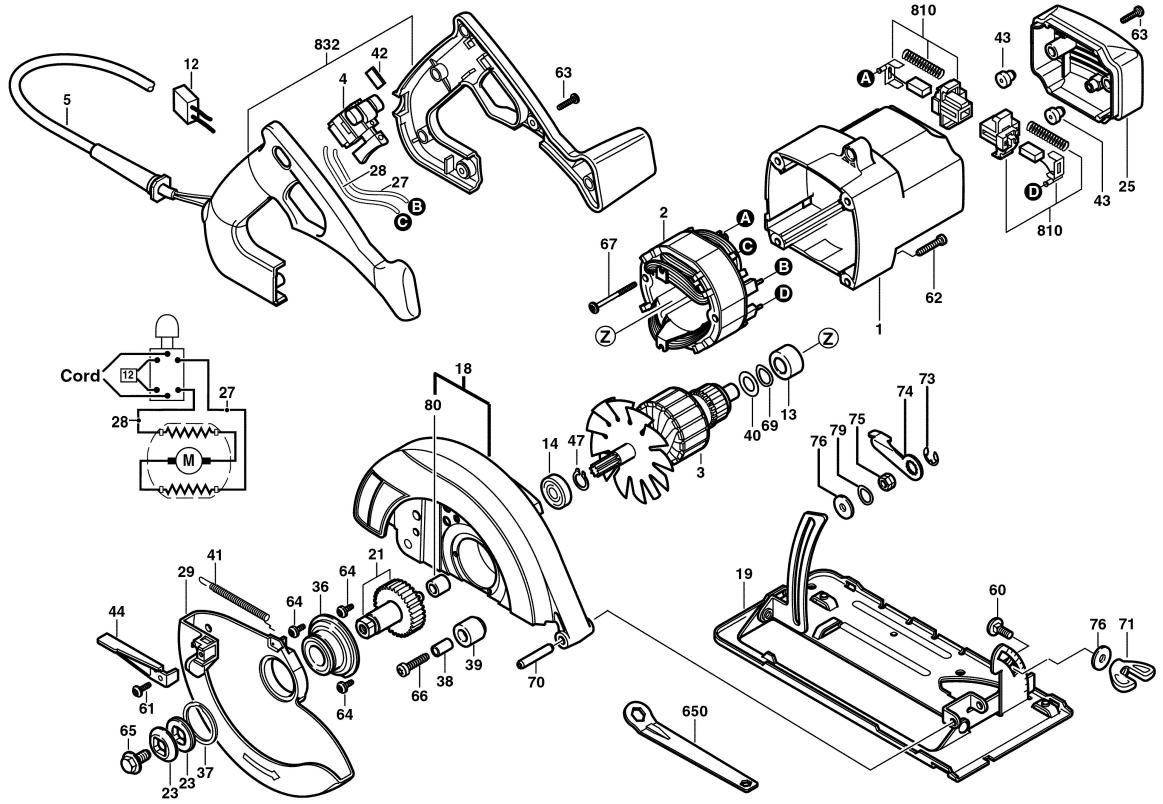
Fig./Abb. 1