F012 535 020
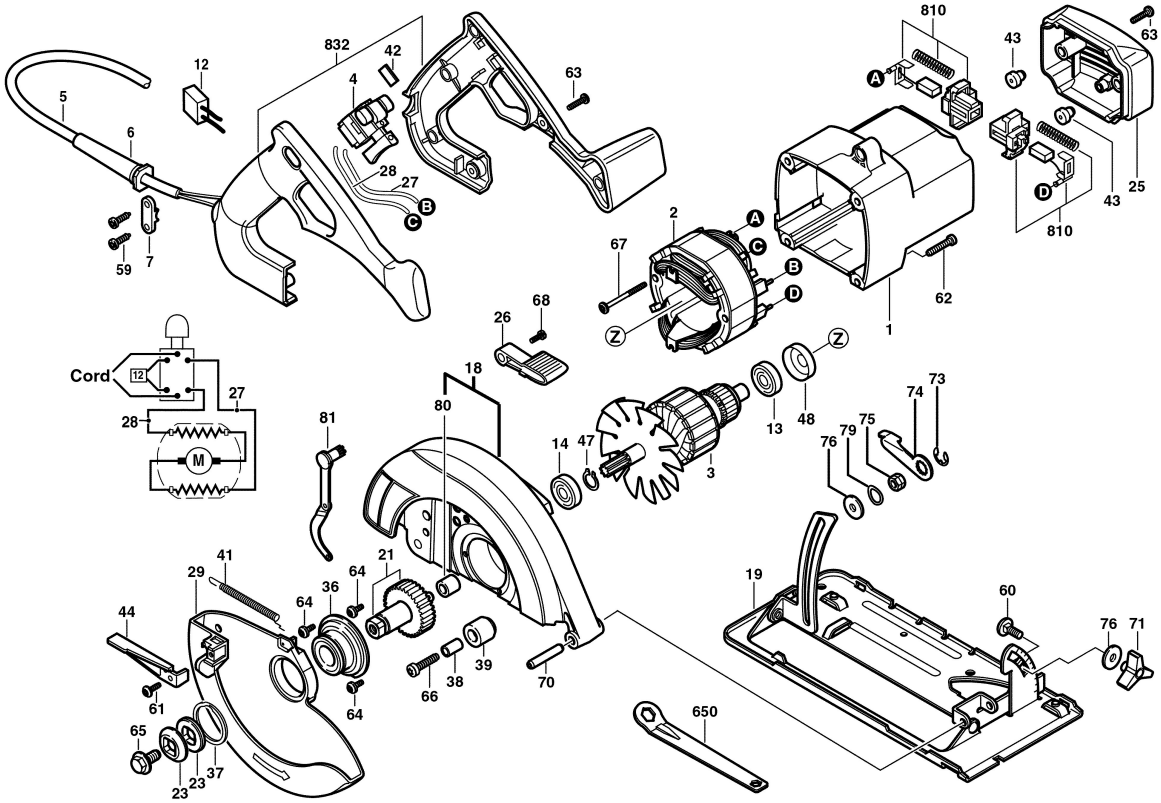
Issue / Stand } 99-12-27 **Fig./Abb. 1**