F012 535 041
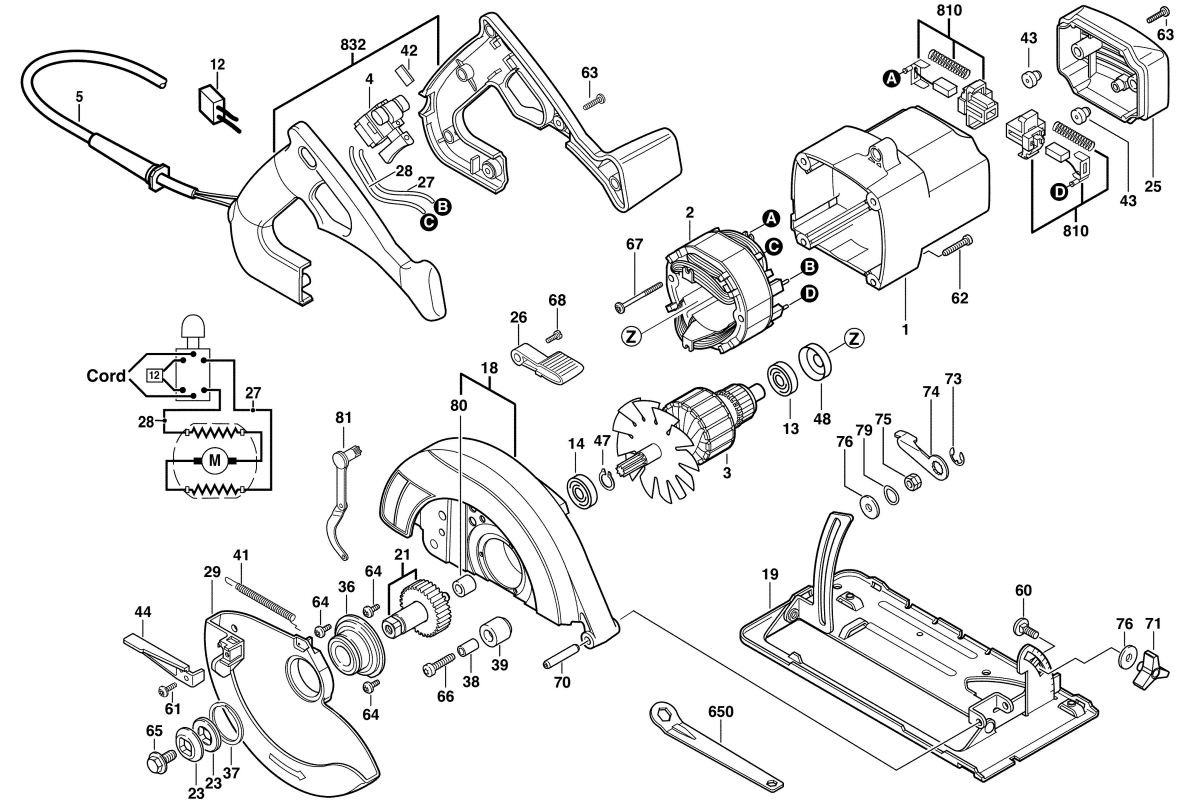
Issue / Stand } 00-03-21 **Fig./Abb. 1**