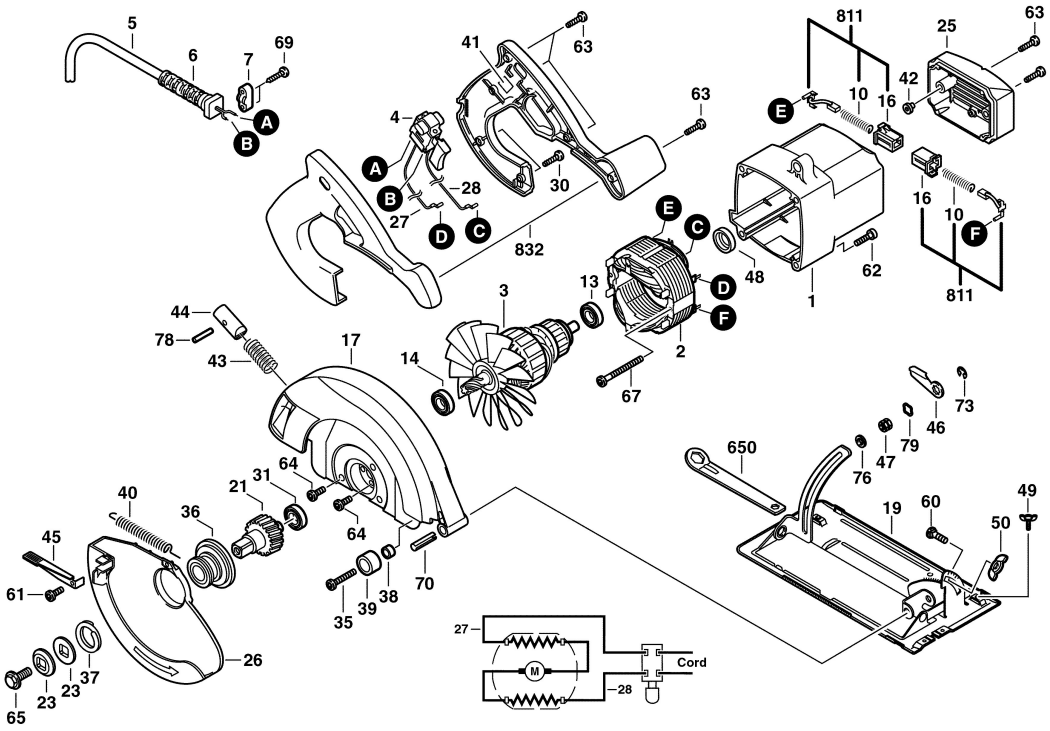F012 536 580
Issue Stand 99-12-27 **Fig./Abb. 1**