F012 536 541
Issue Stand 00-03-01
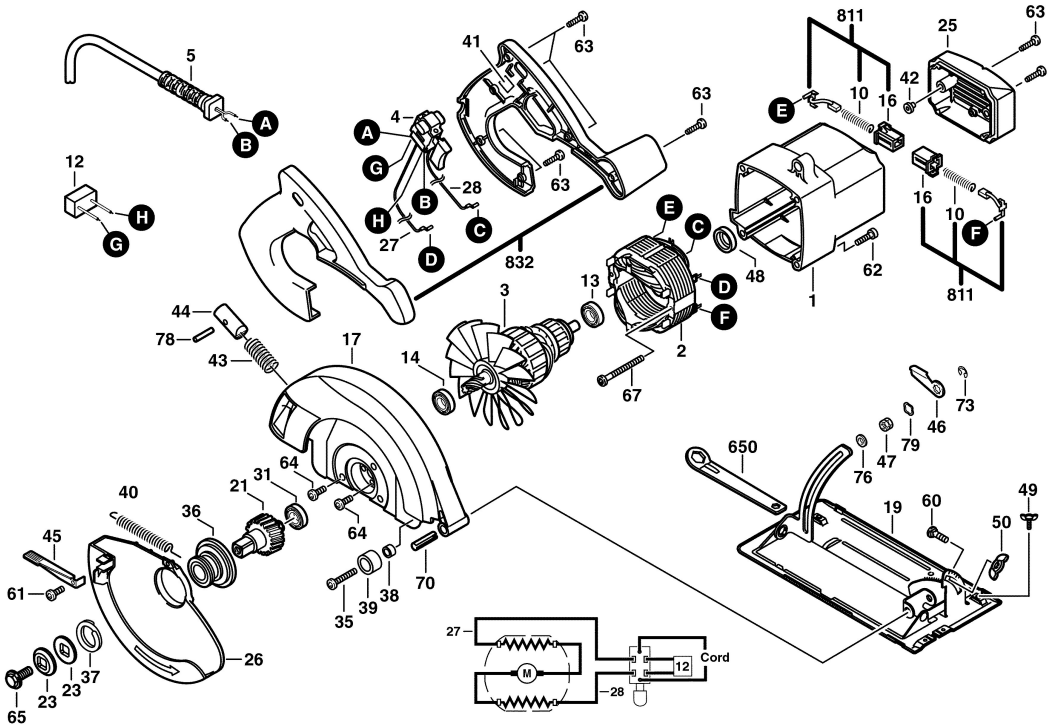
Fig./Abb. 1