F012 536 568
Issue
Stand 00-03-01
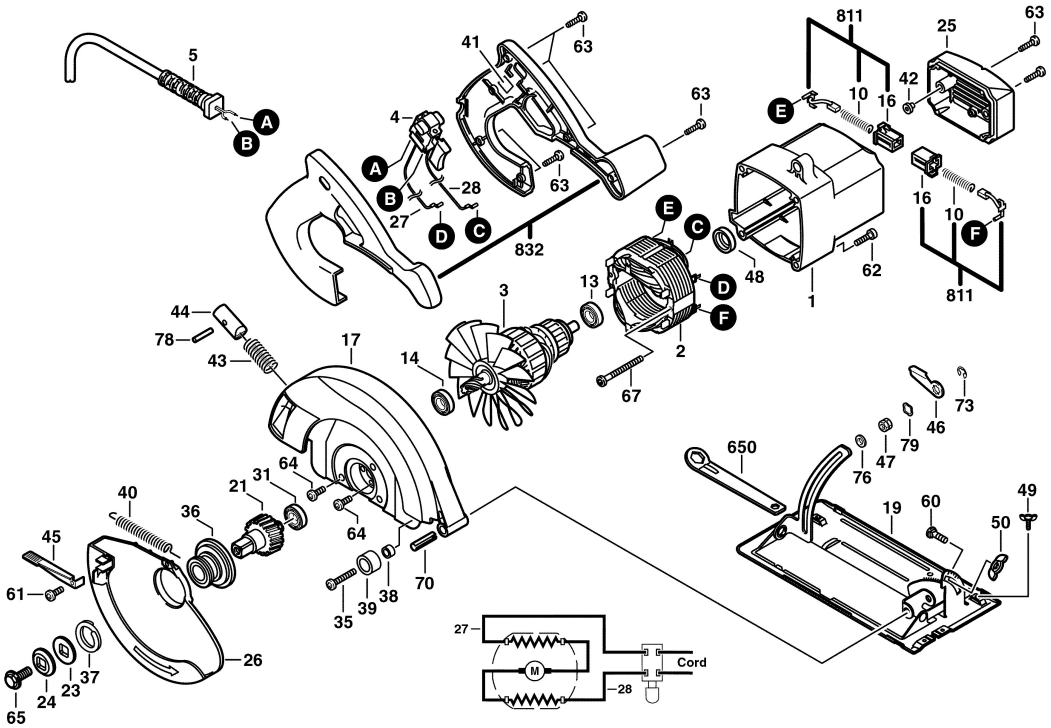
Fig./Abb. 1