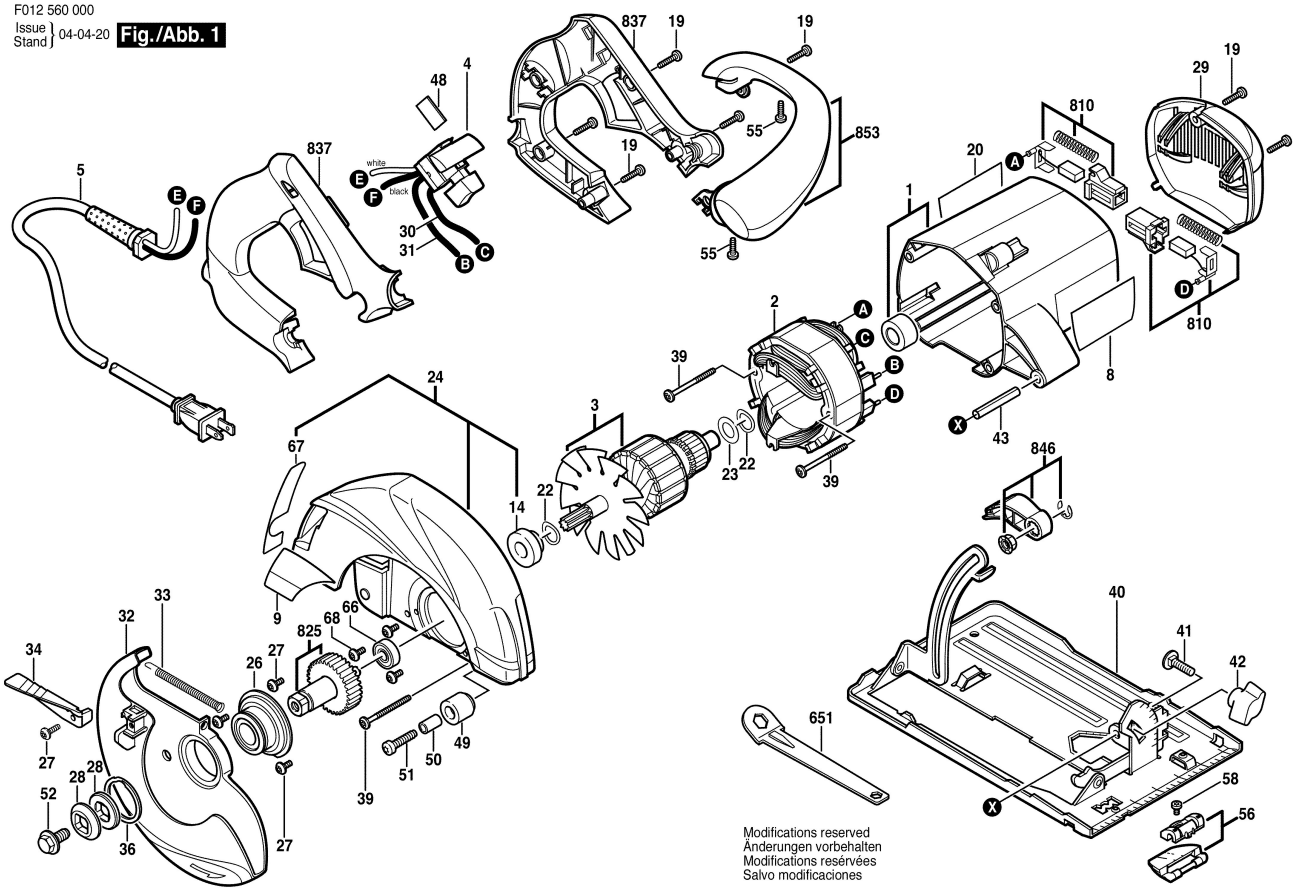F012 560 000
Issue / Stand } 04-04-20 **Fig./Abb. 1**