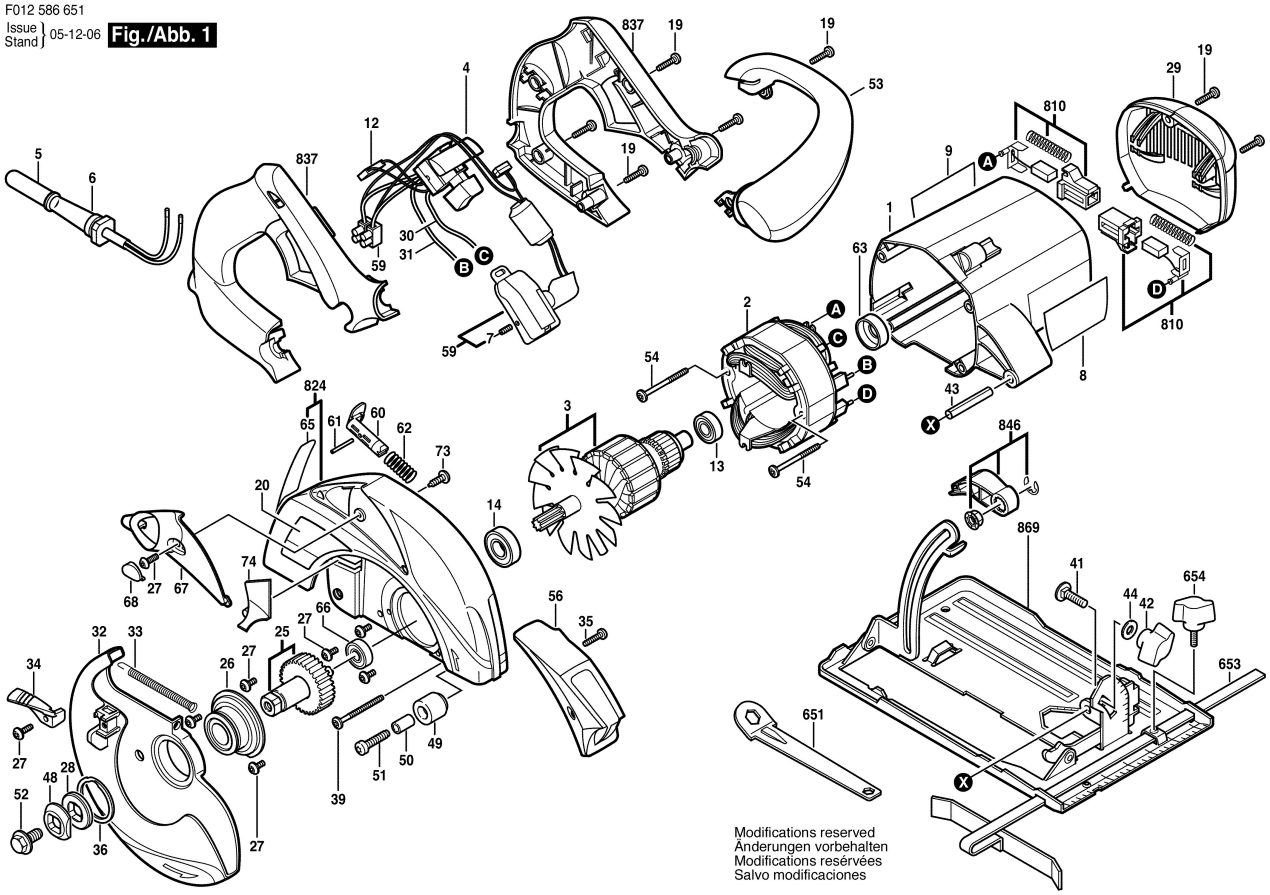F012 586 651
Issue Stand } 05-12-06 **Fig./Abb. 1**