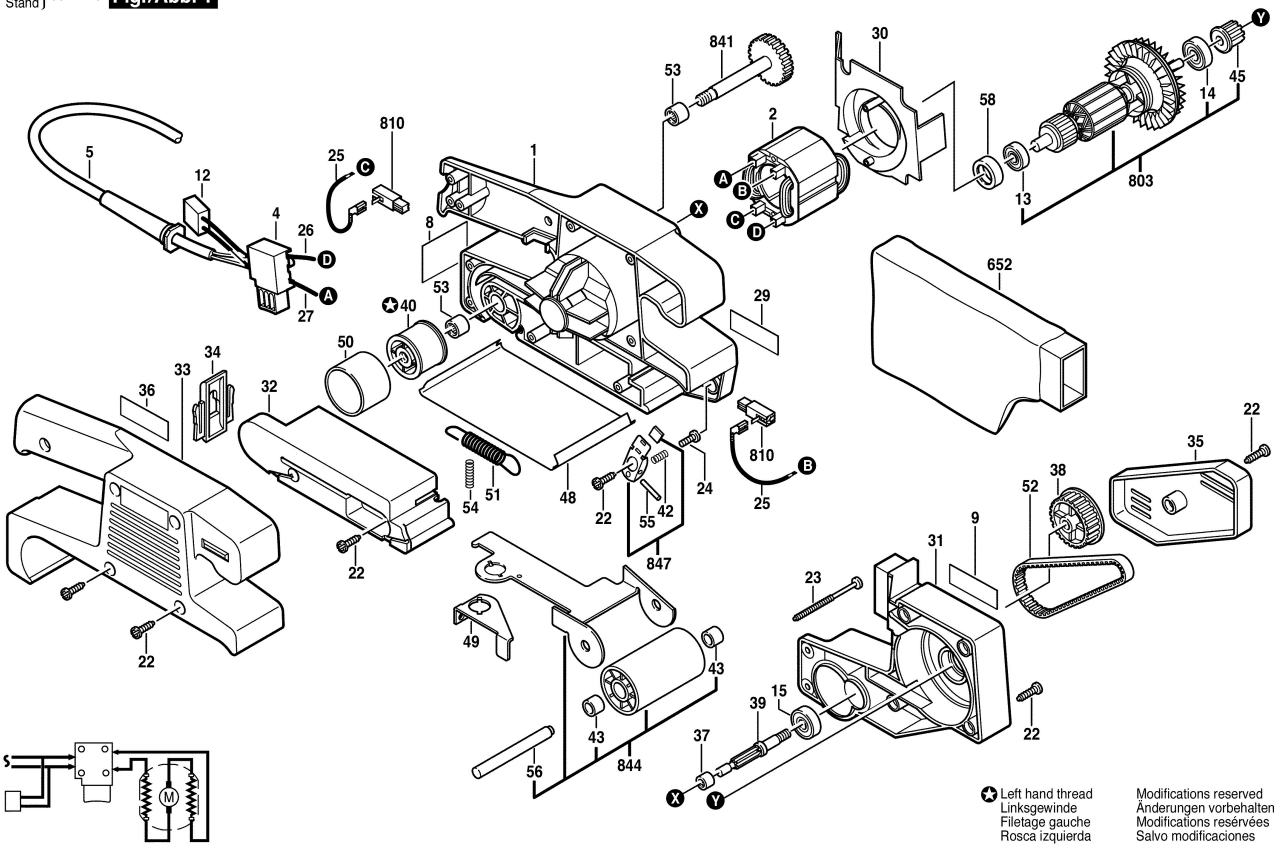F012 731 302
Issue Stand } 00-11-10 **Fig./Abb. 1**