F012 731 39V
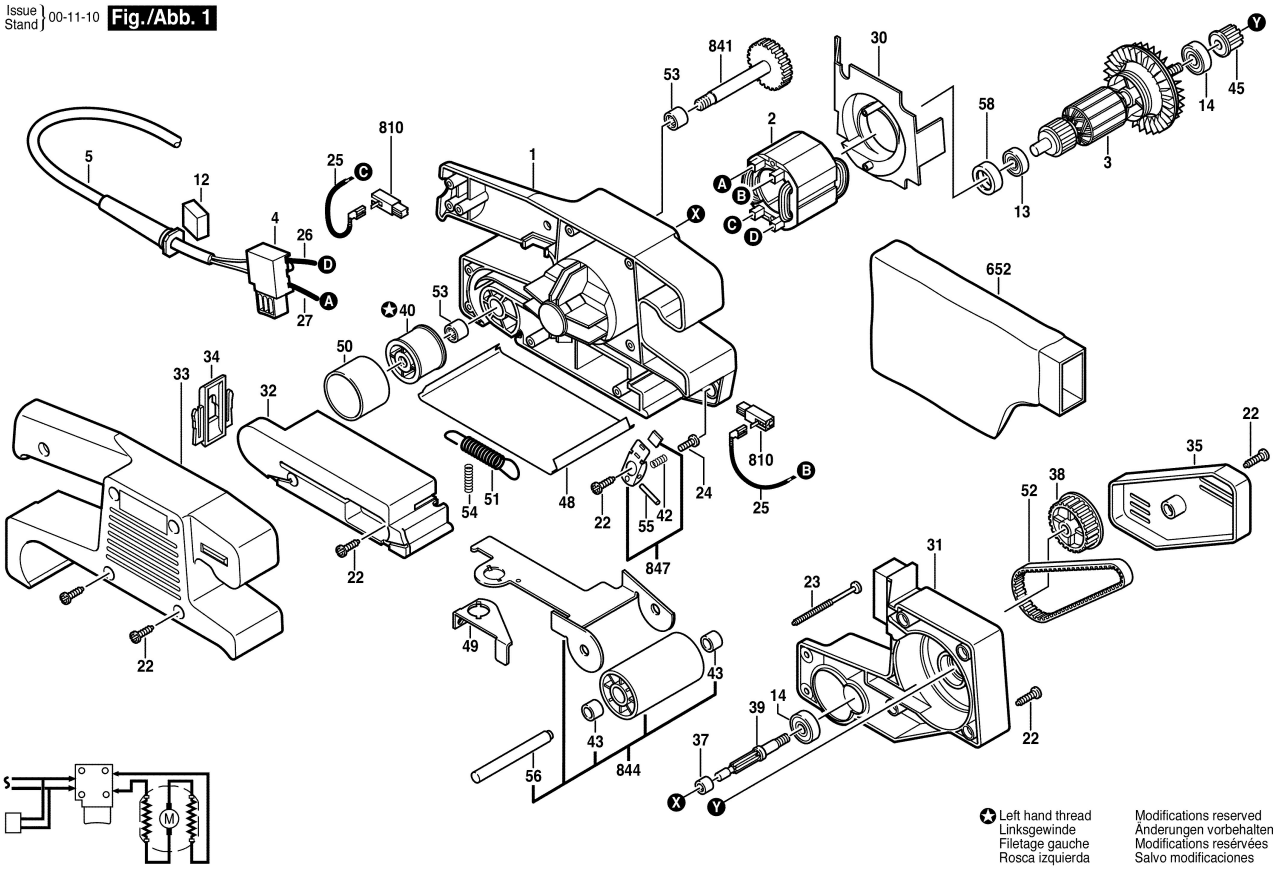
Issue Stand } 00-11-10 **Fig./Abb. 1**