F012 930 041

Stand ~~98-08~~
Issue 99-01-22
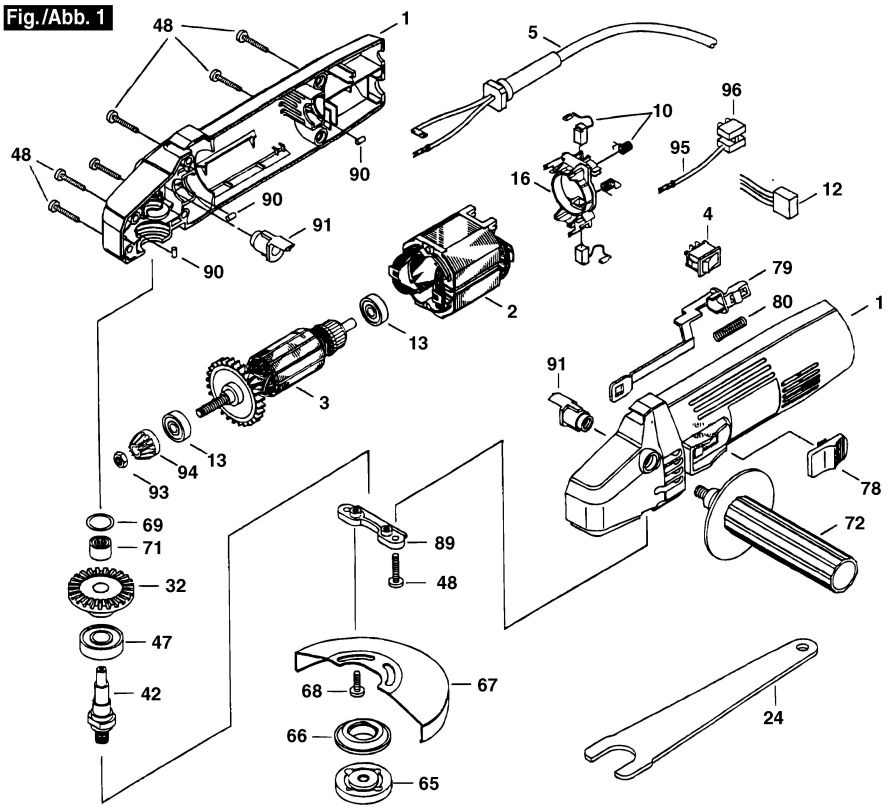
Fig./Abb. 1