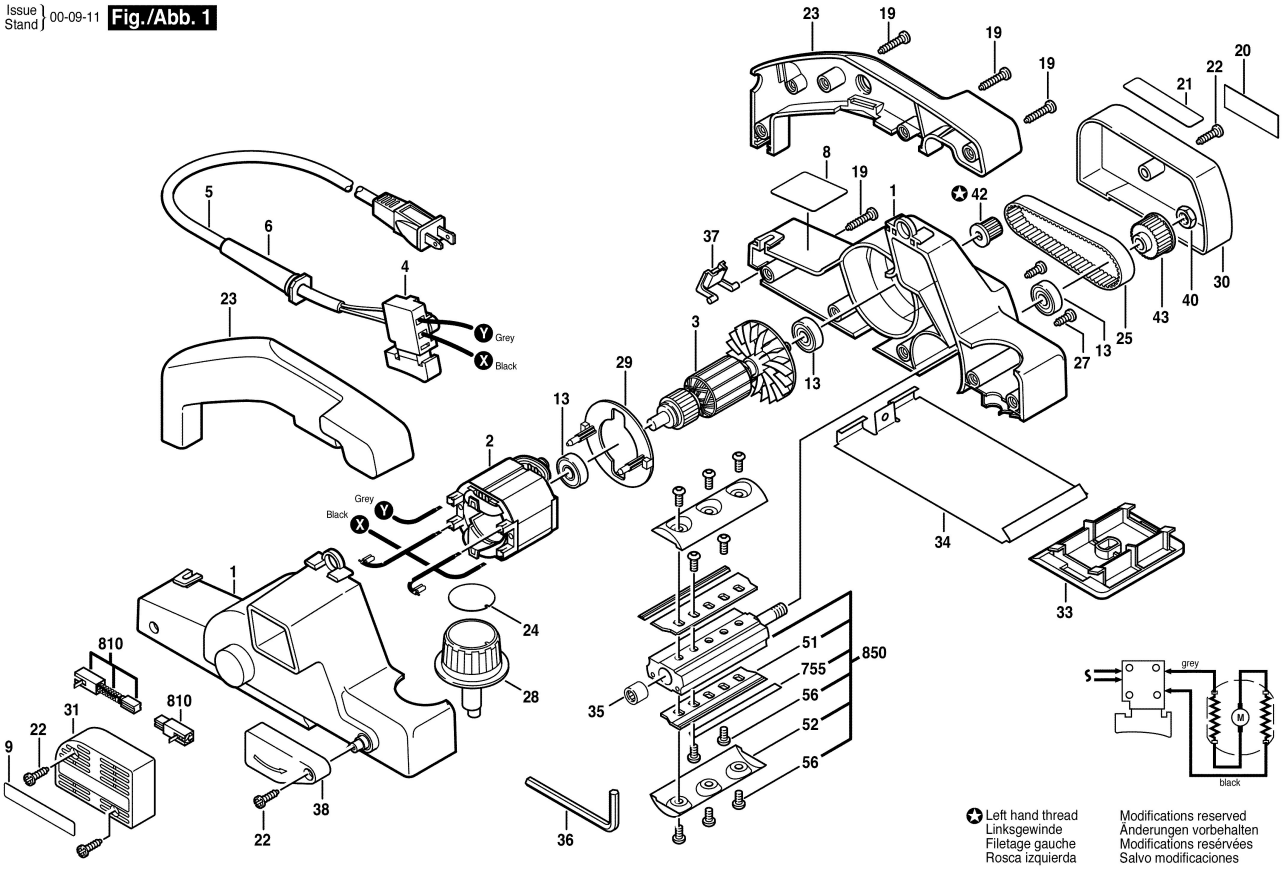F012 X55 500
Issue / Stand } 00-09-11 **Fig./Abb. 1**