F 013 039 504
Stand / Issue 00-12-28
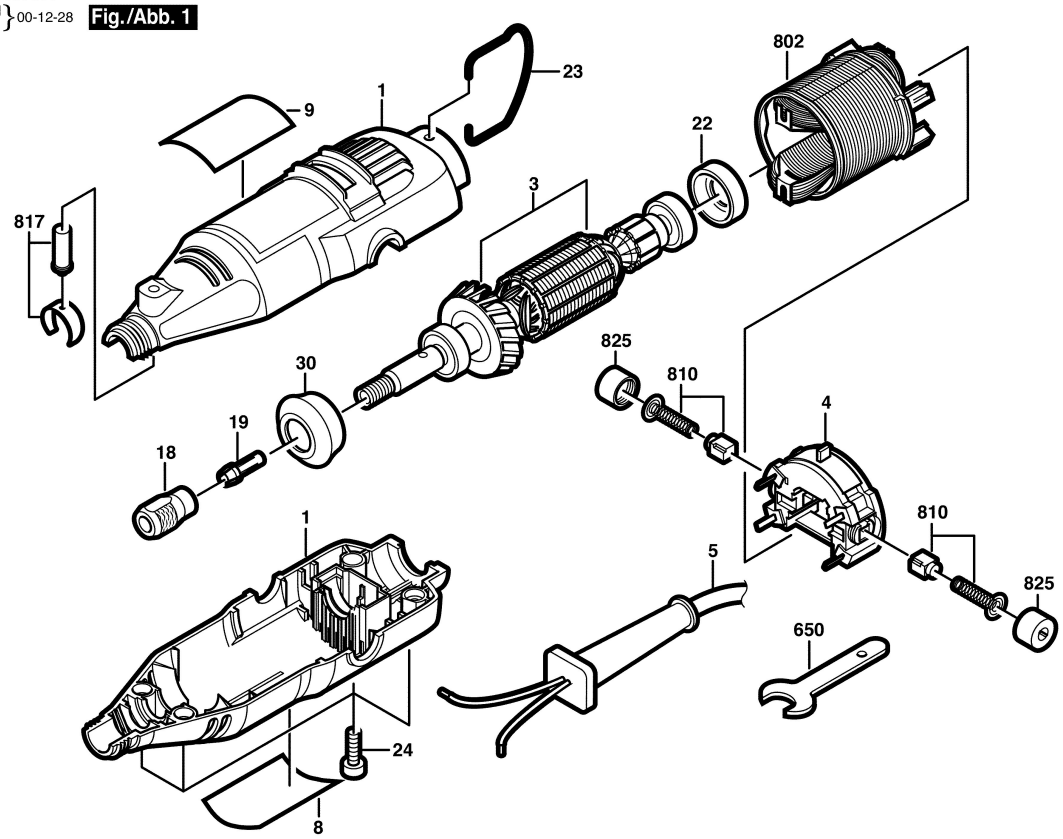
Fig./Abb. 1