F 015 104 611

Stand ~~10-11~~
Issue 12-03-27

Fig. /Abb. 1

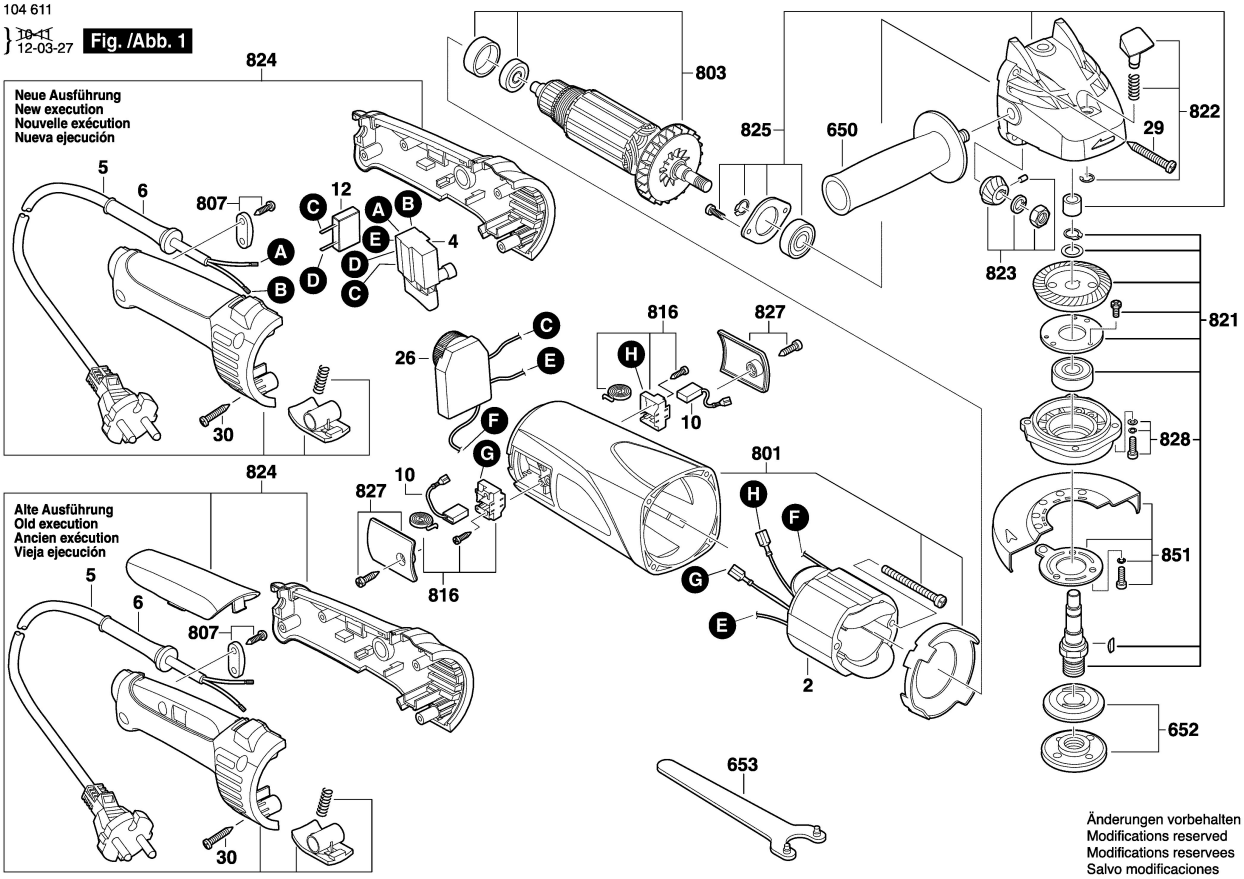

Änderungen vorbehalten
Modifications reserved
Modifications reservees
Salvo modificaciones