F 015 103 311
Issue Stand 12-11-22
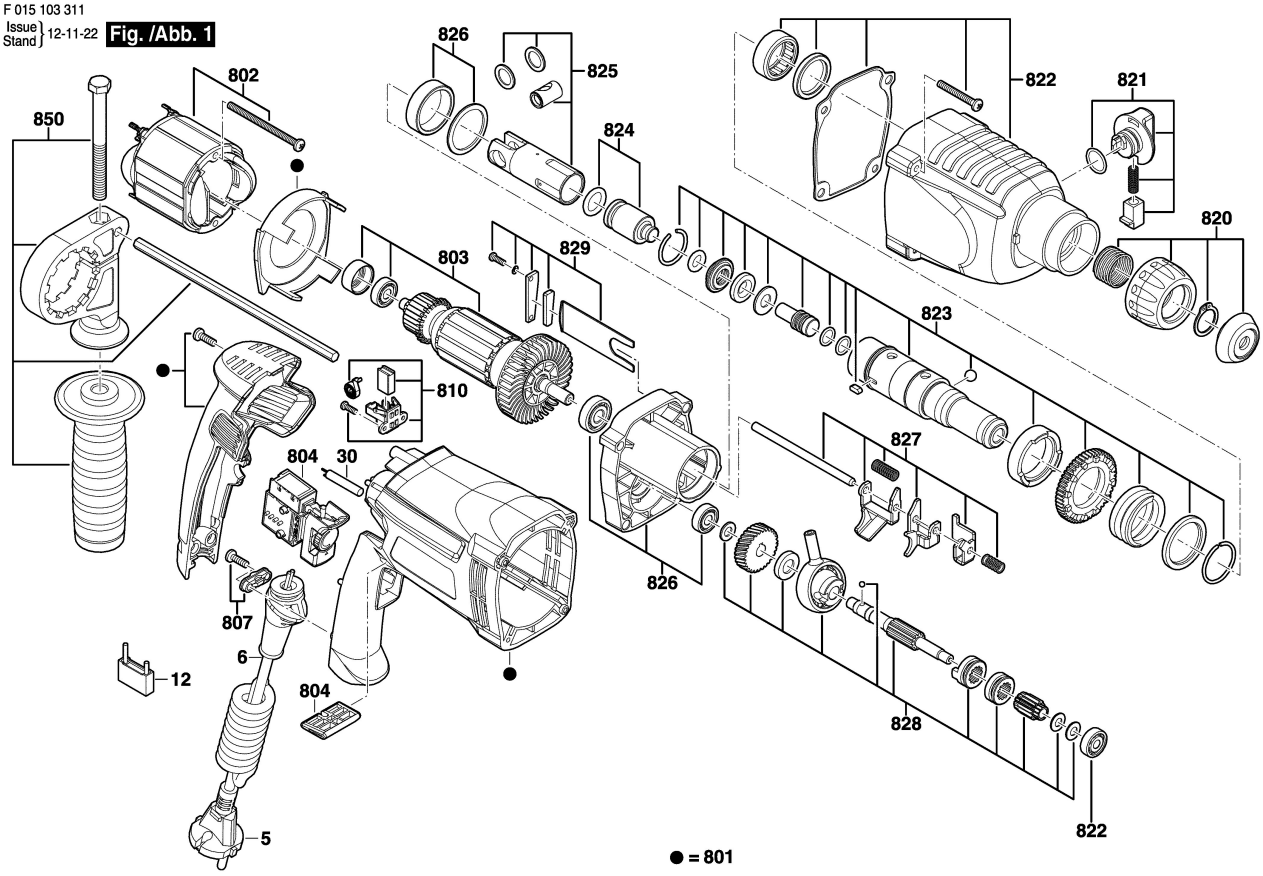
Fig. /Abb. 1