F 015 198 6M1

Stand ~~98-12~~
Issue 99-01-18
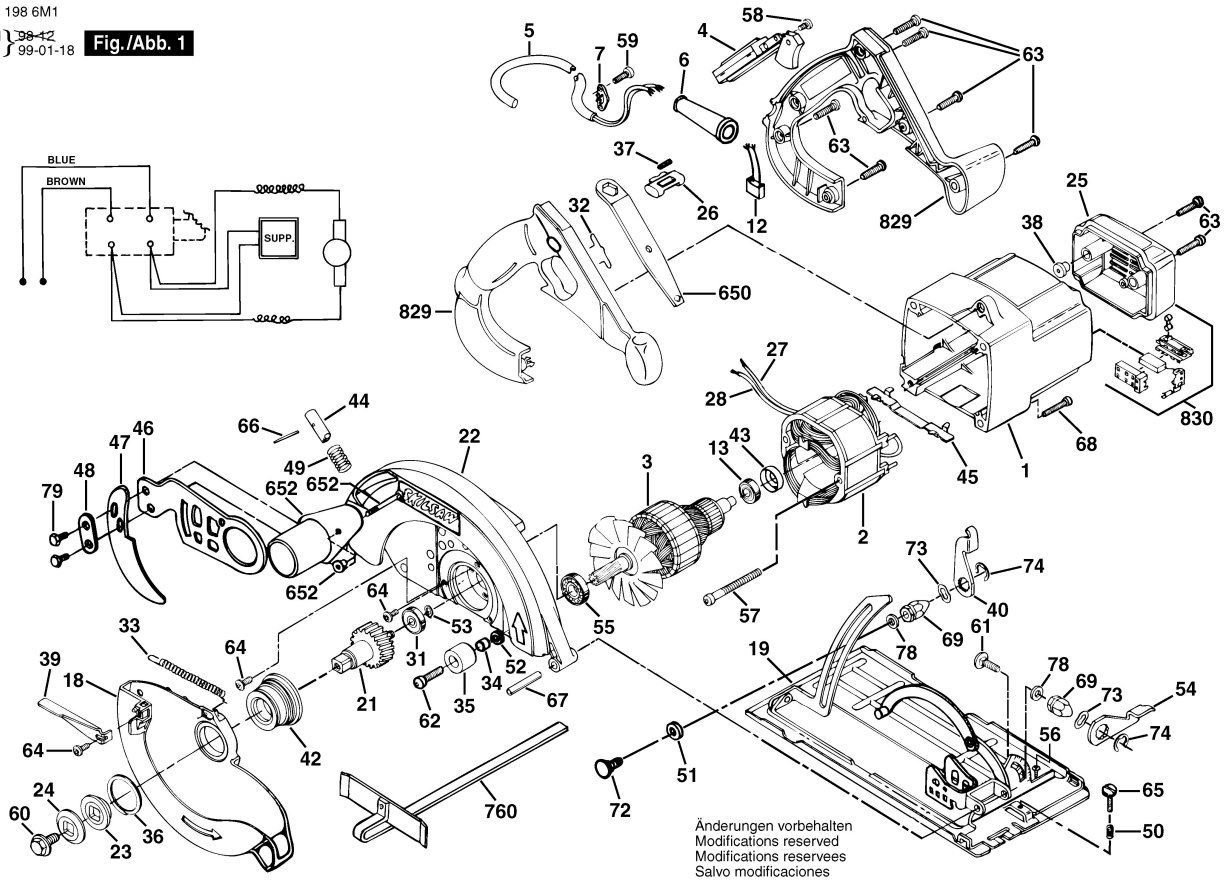
Fig./Abb. 1