F 015 446 5B1
Stand ~~99-02~~
Issue 00-11-01
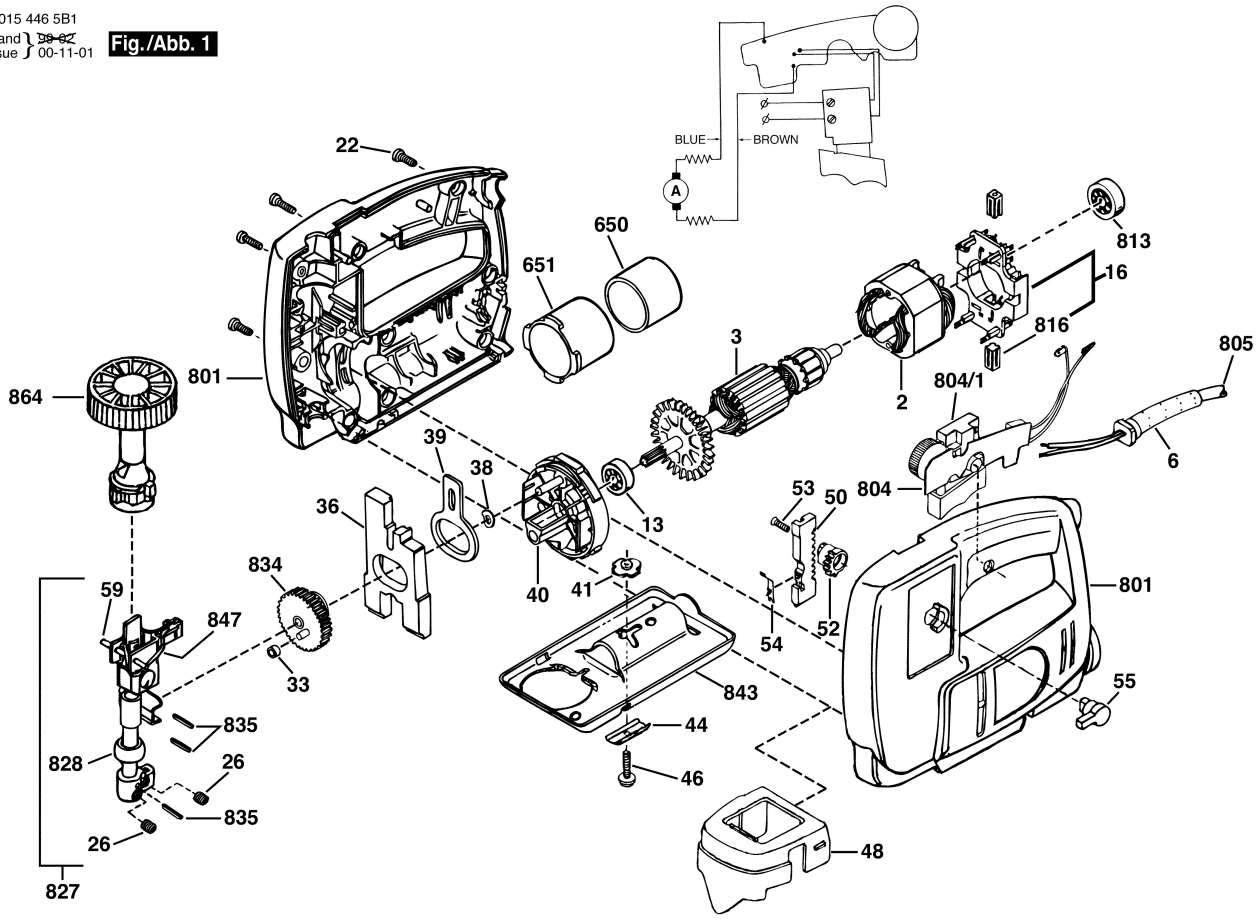
Fig./Abb. 1