F 015 546 6N2

Stand / Issue 01-03-27
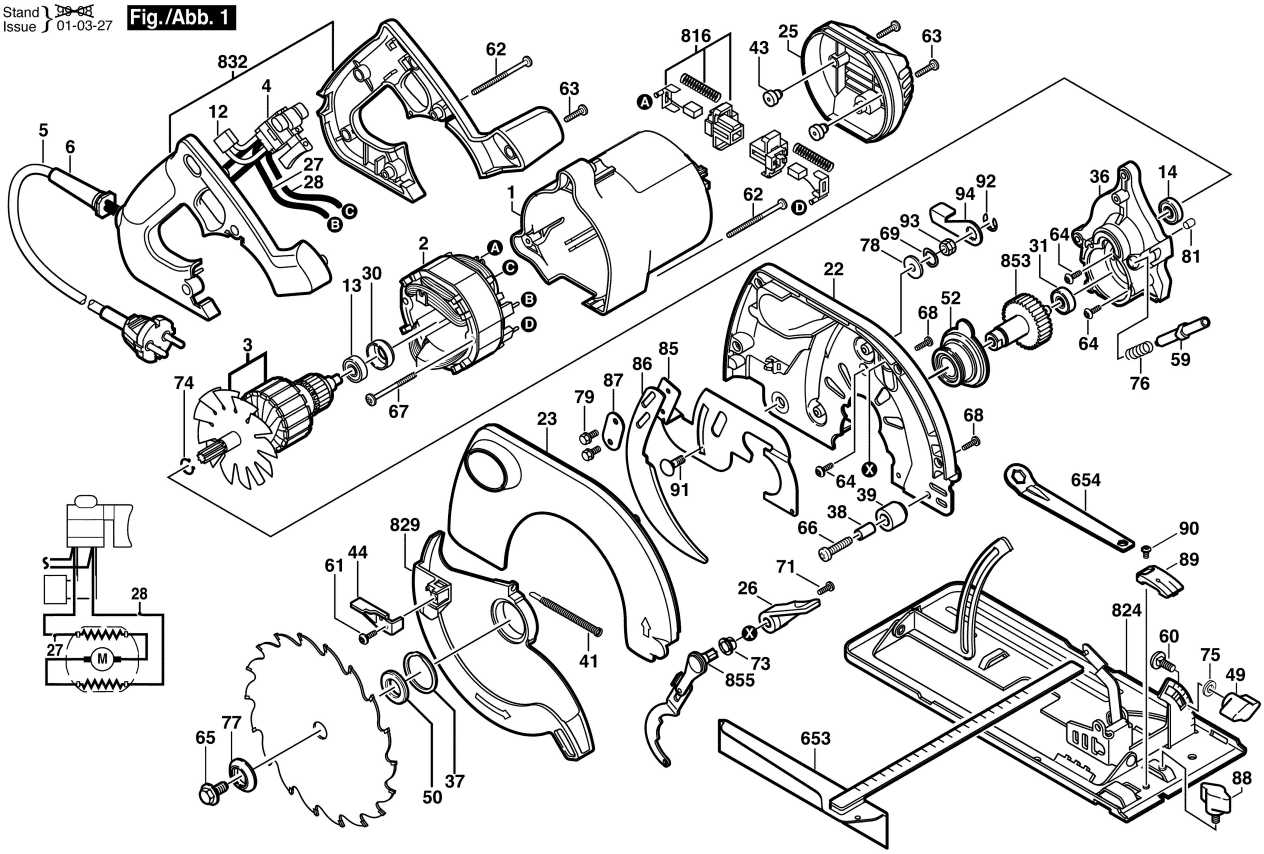
Fig./Abb. 1