F 015 556 6A1

Stand / Issue ~~99-02~~ 99-09-03

Fig./Abb. 1

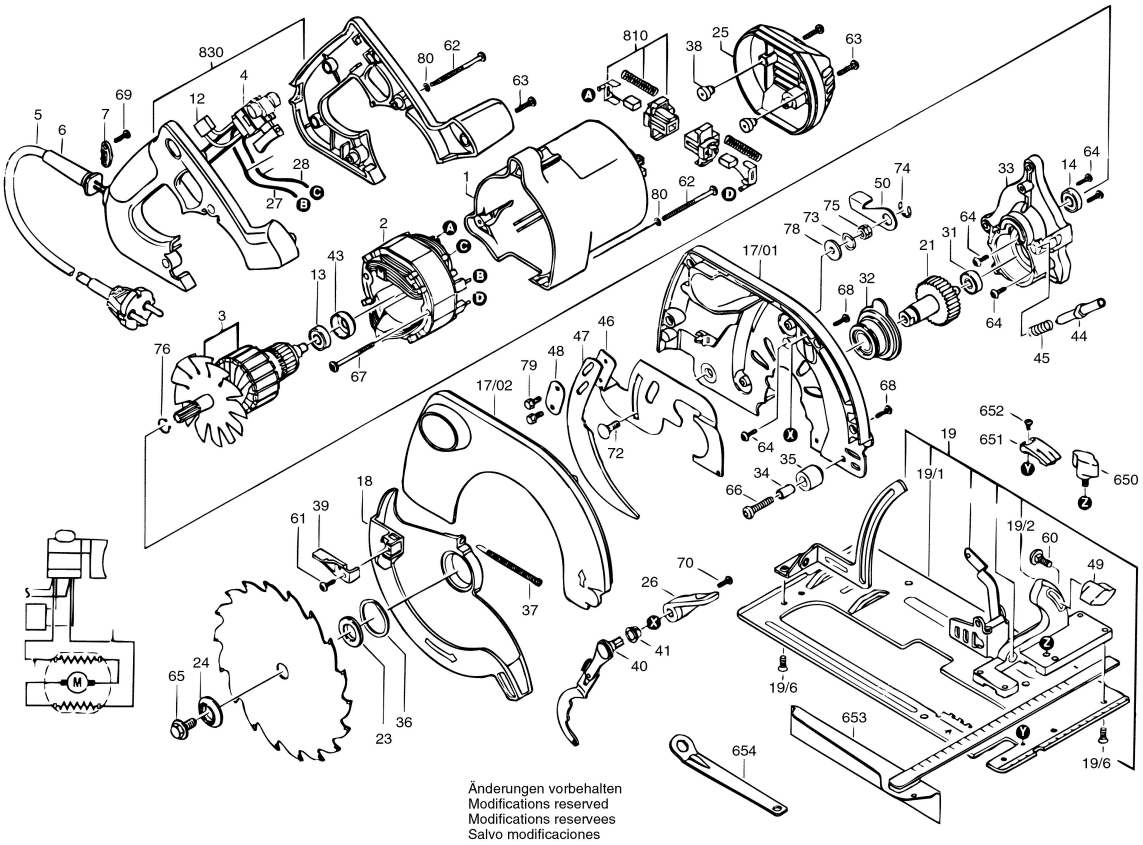

Änderungen vorbehalten
Modifications reserved
Modifications reservees
Salvo modificaciones