F 015 669 201
Stand ~~07-08-07~~
Issue 07-03-14

Fig./Abb. 1

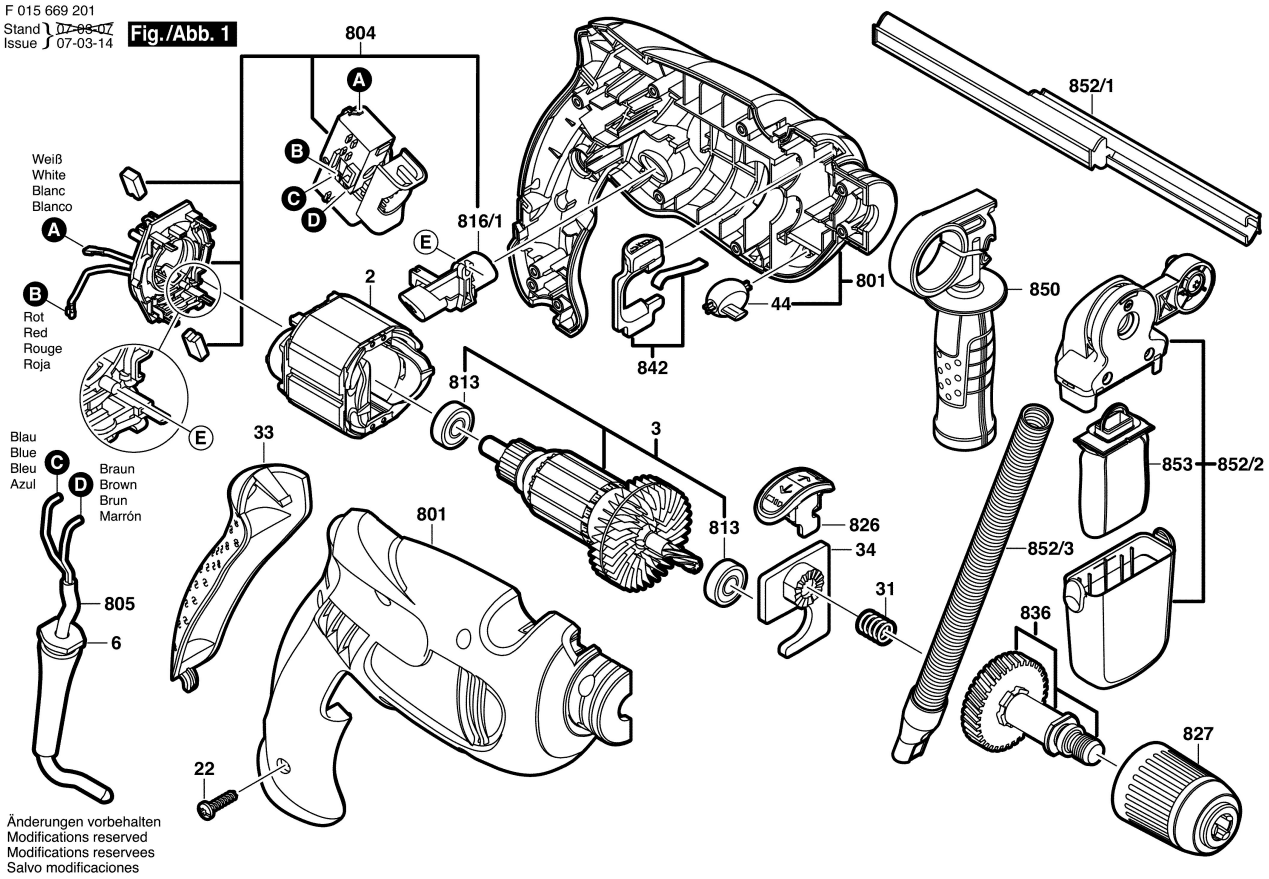

Änderungen vorbehalten
Modifications reserved
Modifications reservees
Salvo modificaciones