F 015 721 003

Stand ~~03-08~~
Issue 03-09-02
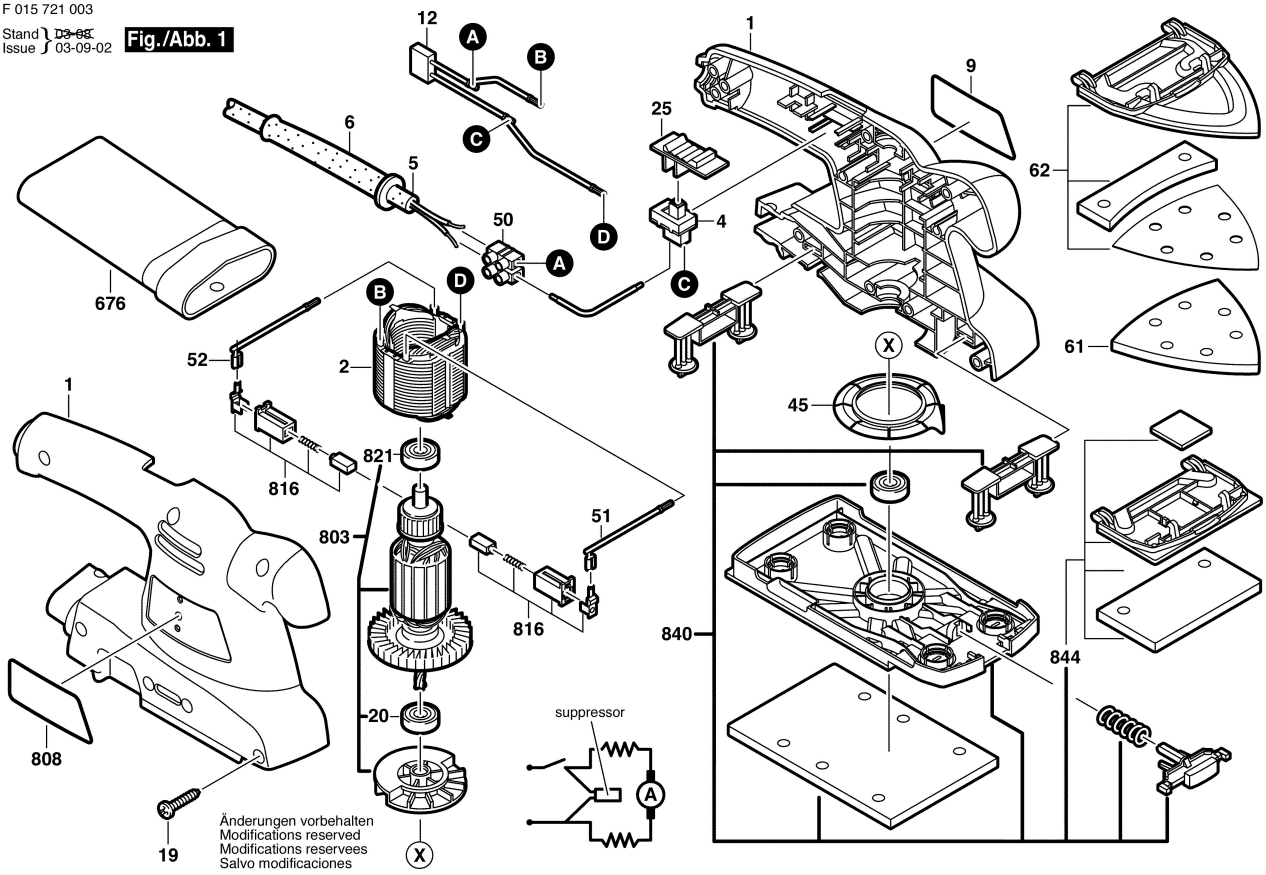
Fig./Abb. 1