F 015 912 6F3

Stand ~~98-12~~
Issue 99-01-18

Fig./Abb. 1

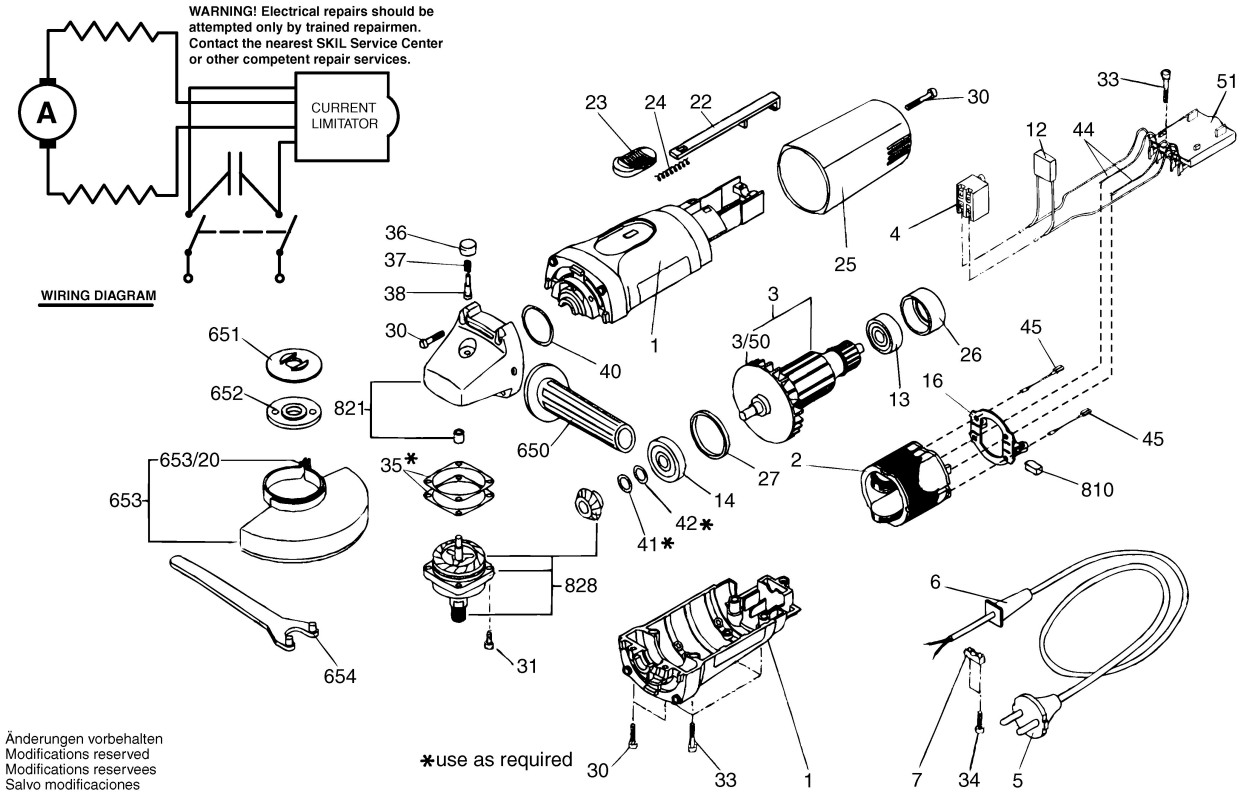

Änderungen vorbehalten
Modifications reserved
Modifications reservees
Salvo modificaciones