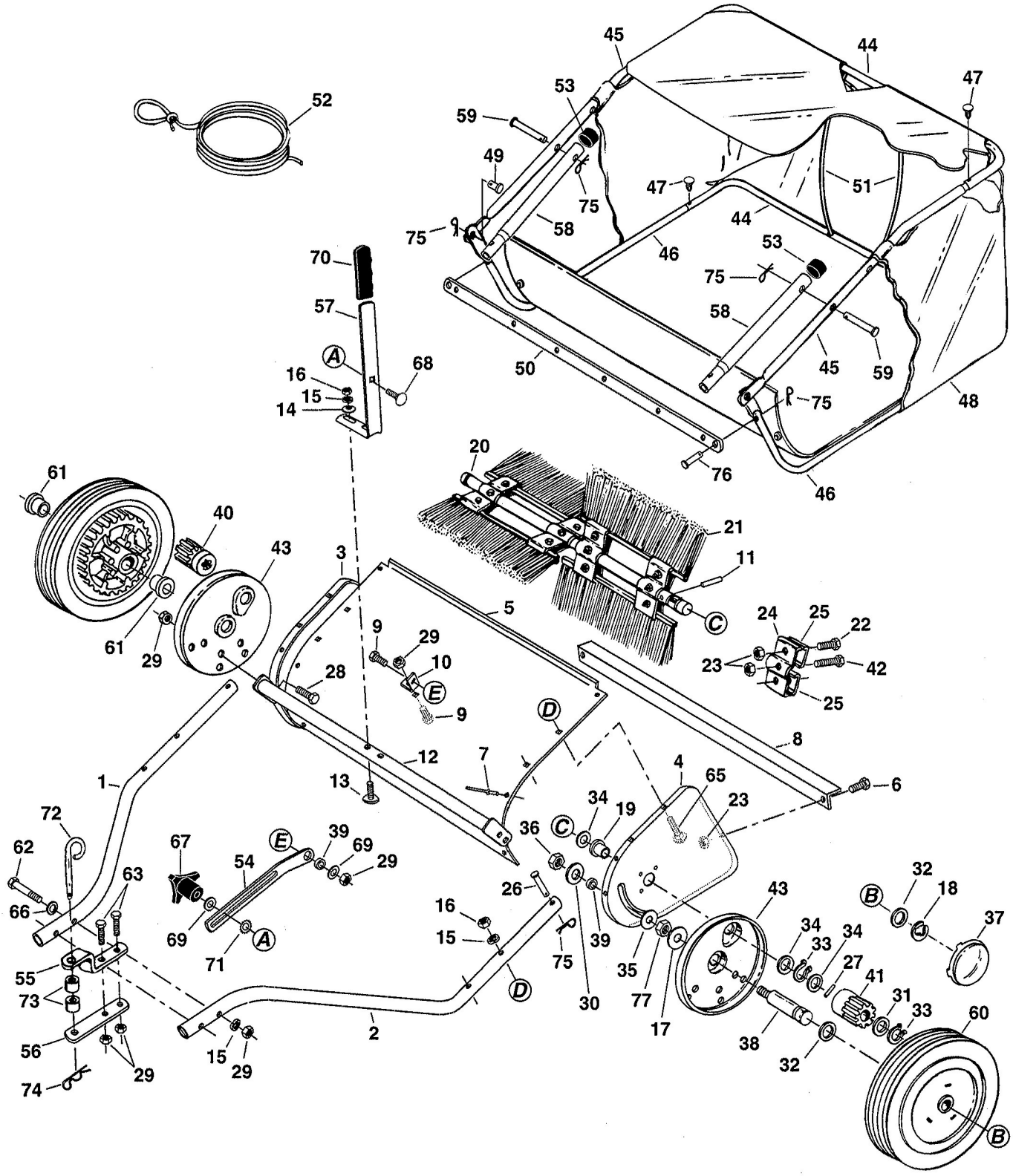REPAIR PARTS FOR MODEL 45-0337 30" LAWNSWEEPER