Hitachi Power Tools LIST NO.0421

ELECTRIC TOOL PARTS LIST

■ HAMMER

2005・6・1

Model PH-65A
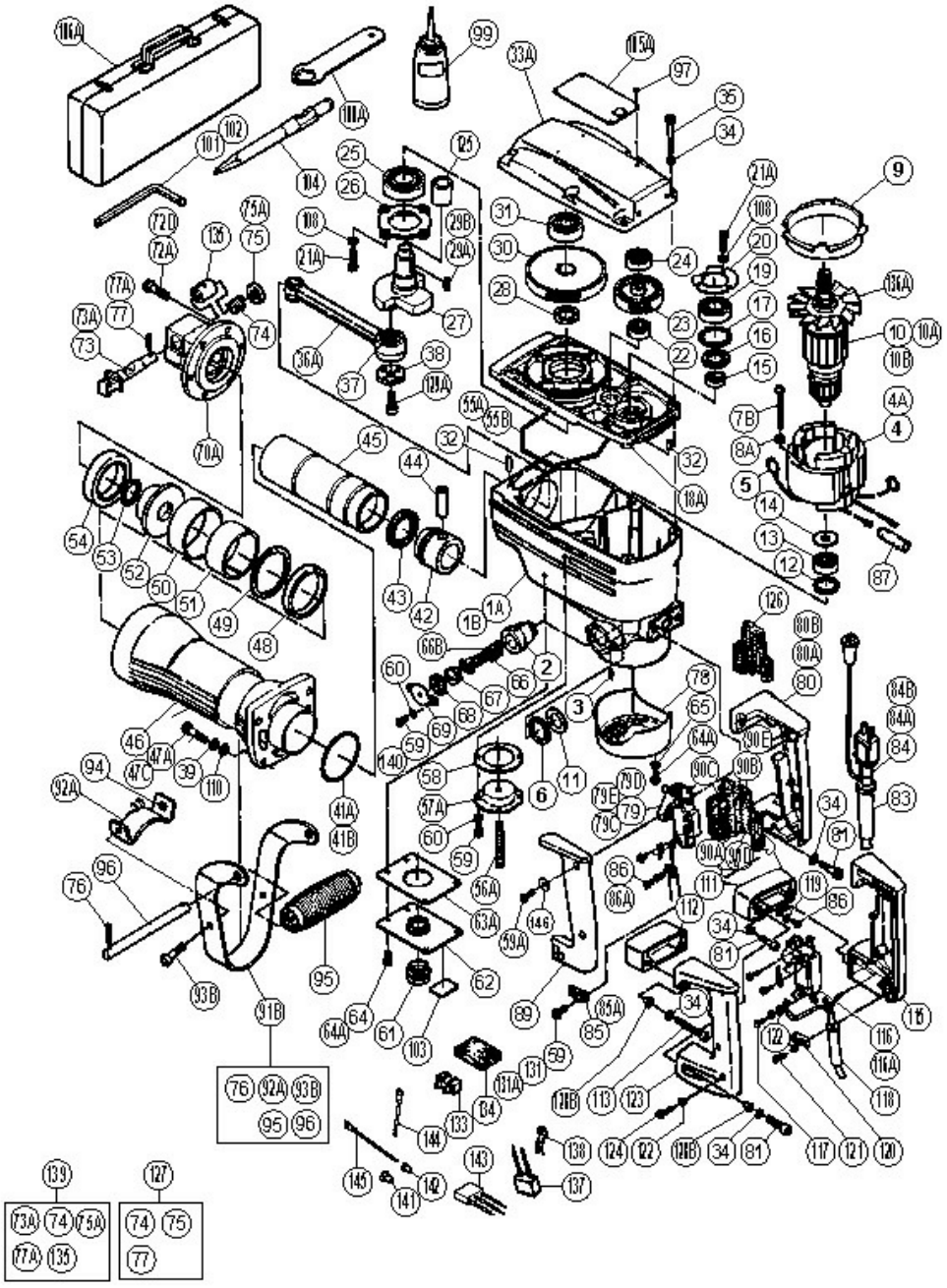
(E8-4)